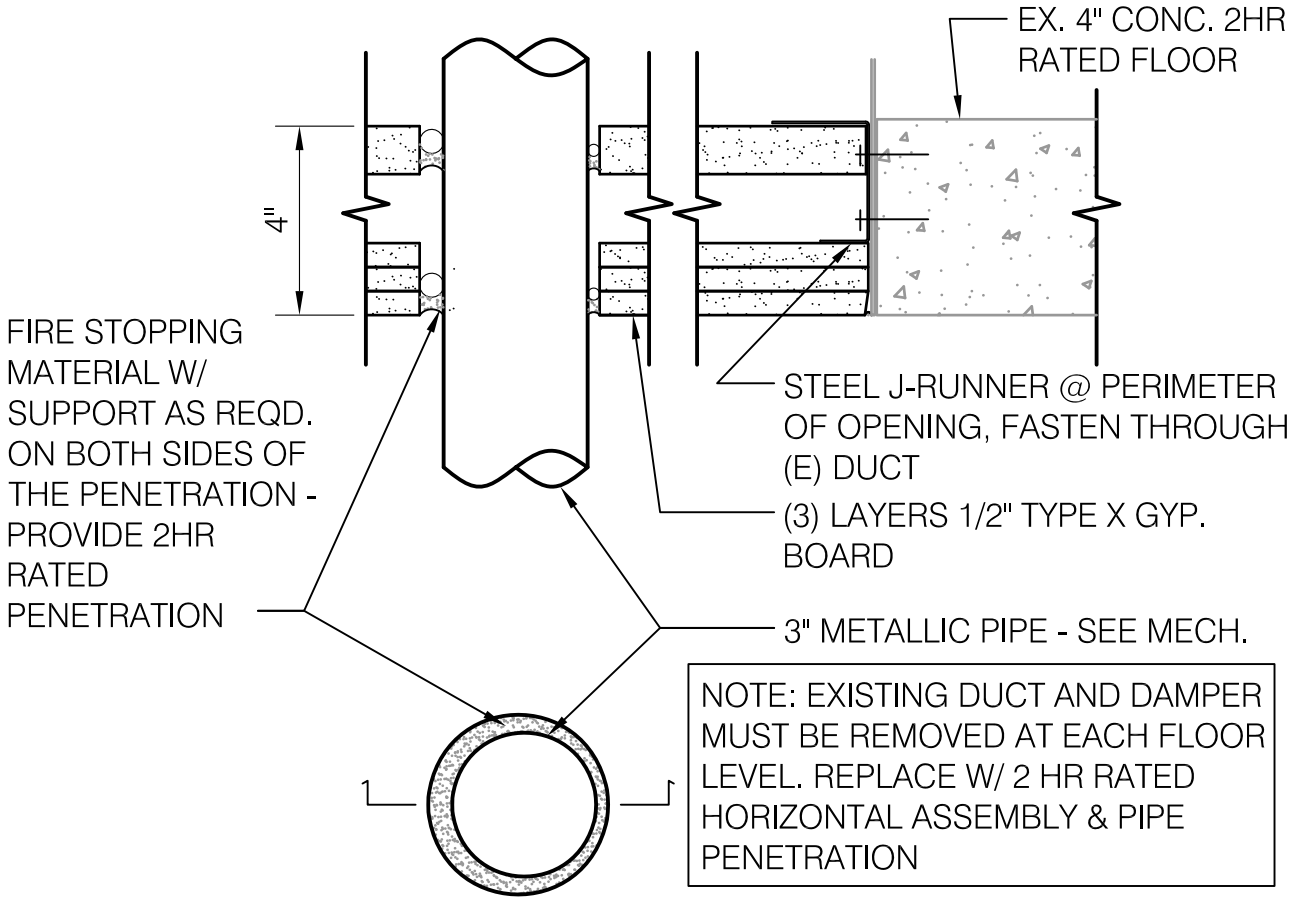

0751 FLOOR PENETRATION ENPLANING

SCALE: 3" = 1'-0"